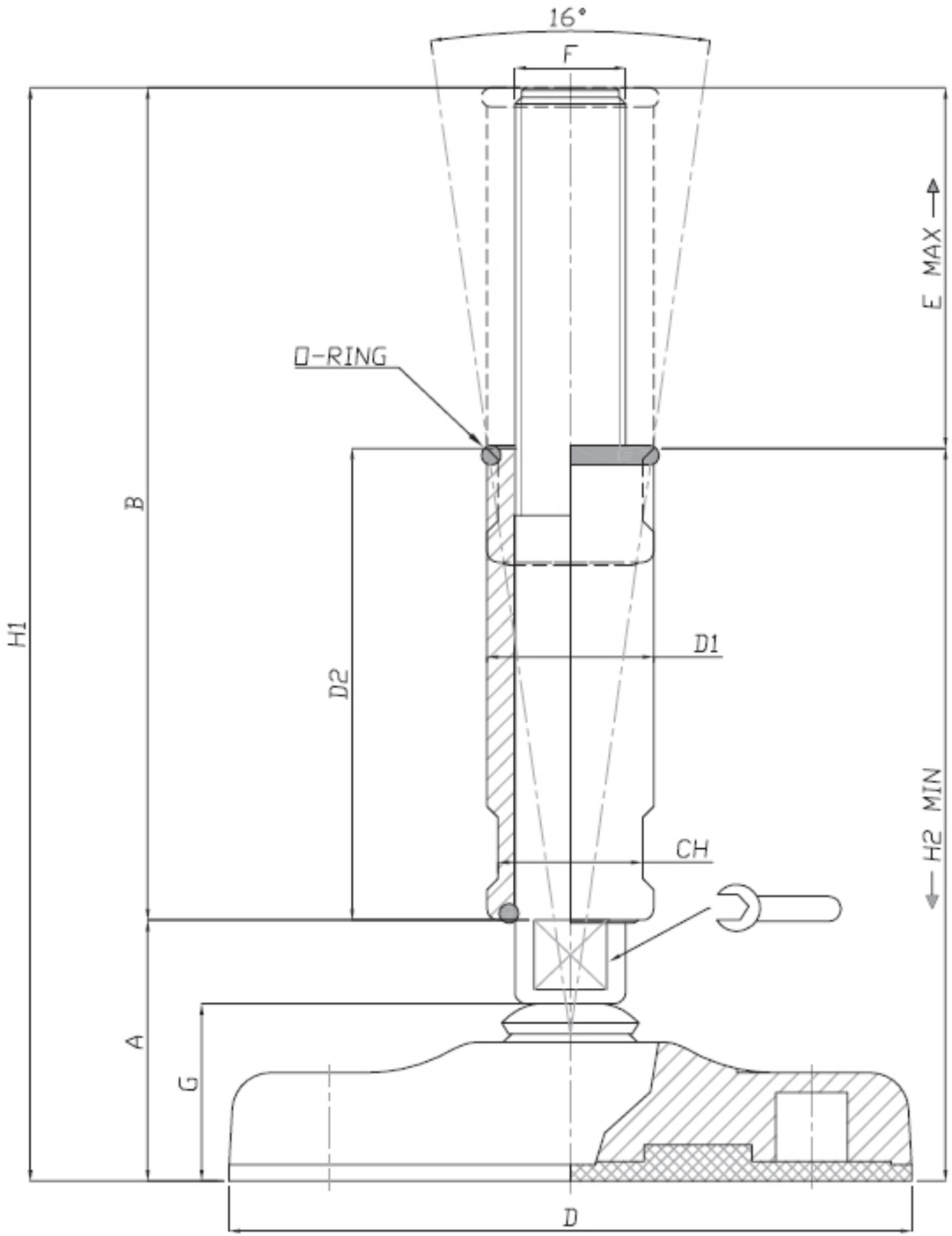
16°
F
E MAX
O-RING
B
H1
D1
D2
CH
H2 MIN
A
G
D

CODE	REGULATION STROKE	MAIN DIMENSIONS										STATIC LOAD
		A	B	D		D1	F	G	CH	H1	H2	Lbs
15250	40mm	52	150	Ø103	17	30	M20	37	26	202	137	4496
15251	40mm	52	150	Ø103	20	35	M24	37	30	202	137	4496
15253	40mm	57	150	Ø123	17	30	M20	42	26	207	142	6744
15254	40mm	57	150	Ø123	20	35	M24	42	30	207	142	6744
15255	40mm	57	150	Ø123	26	42	M30	42	36	207	142	6744

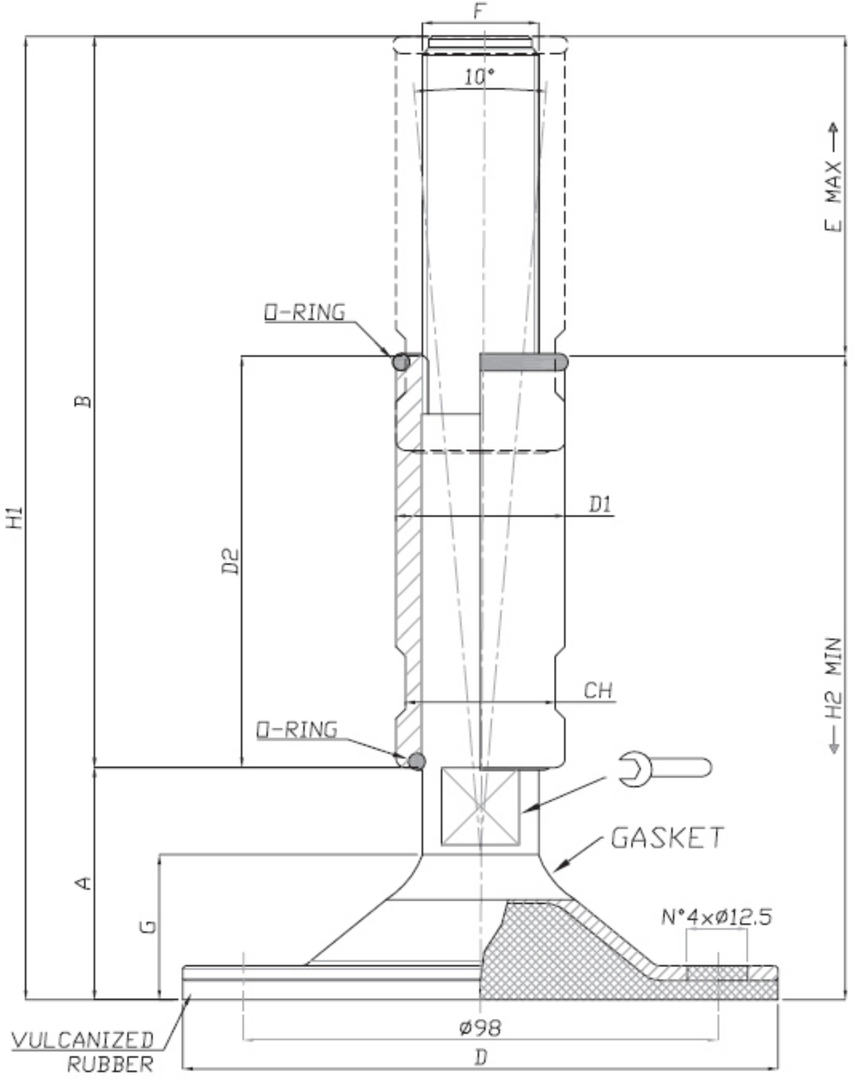
F
10°
E MAX
O-RING
B
H1
D1
D2
CH
O-RING
H2 MIN
GASKET
A
G
N°4xØ12.5
VULCANIZED RUBBER
Ø98
D

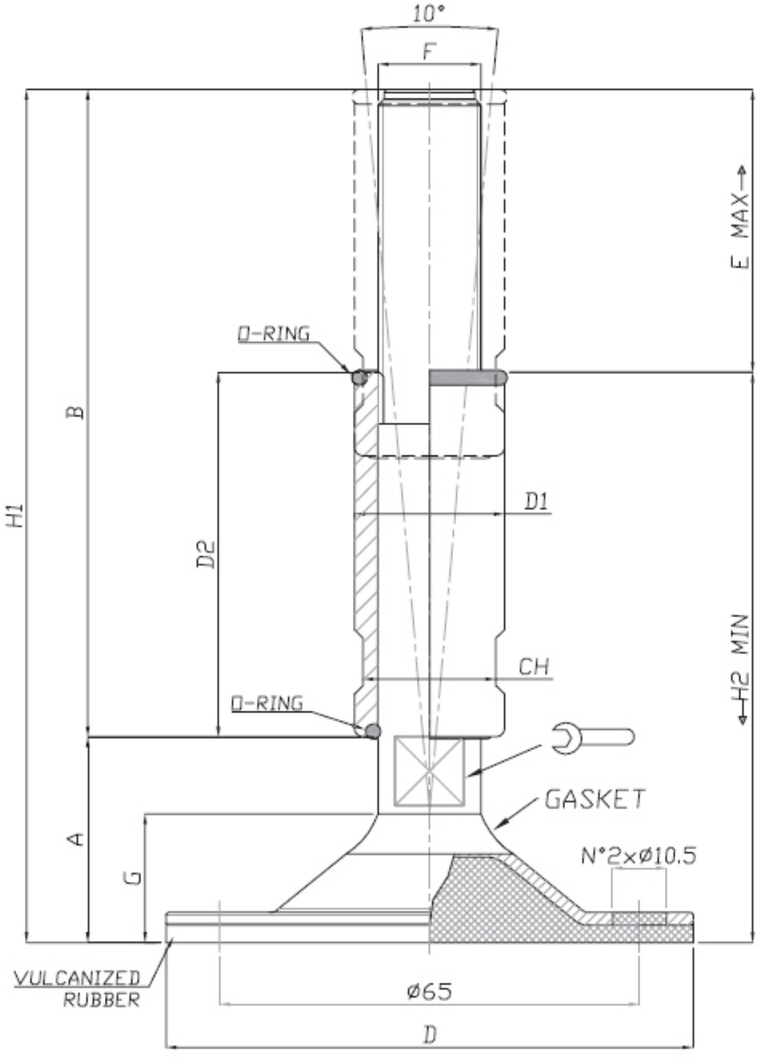
10°
F
E MAX
O-RING
B
H1
D1
D2
CH
O-RING
H2 MIN
GASKET
A
G
N°2xØ10.5
VULCANIZED RUBBER
Ø65
D

CODE	REGULATION STROKE	MAIN DIMENSIONS											STATIC LOAD
		A	B	D		D1	D2	F	G	CH	H1	H2	Lbs
15800/V	40mm	31	125	Ø85	17	24	60	M16	17	20	156	91	2697
15802/V	40mm	31	150	Ø85	17	24	60	M16	17	20	181	116	2697
15804/V	40mm	31	150	Ø85	17	30	60	M20	17	26	181	116	2697
15805/V	65mm	31	200	Ø85	17	30	85	M20	17	26	231	166	2697
15806/V	40mm	36	150	Ø123	17	24	60	M16	23	20	186	121	4496
15808/V	40mm	36	150	Ø123	17	30	60	M20	23	26	186	121	4496
15810/V	40mm	36	150	Ø123	20	35	60	M24	23	30	186	121	4496
15812/V	40mm	36	150	Ø123	26	42	60	M30	23	36	186	121	4496
15813/V	65mm	36	200	Ø123	17	30	85	M20	23	26	236	171	4496
15815/V	65mm	36	200	Ø123	20	35	85	M24	23	30	236	171	4496
15817/V	65mm	36	200	Ø123	26	42	85	M30	23	36	236	171	4496

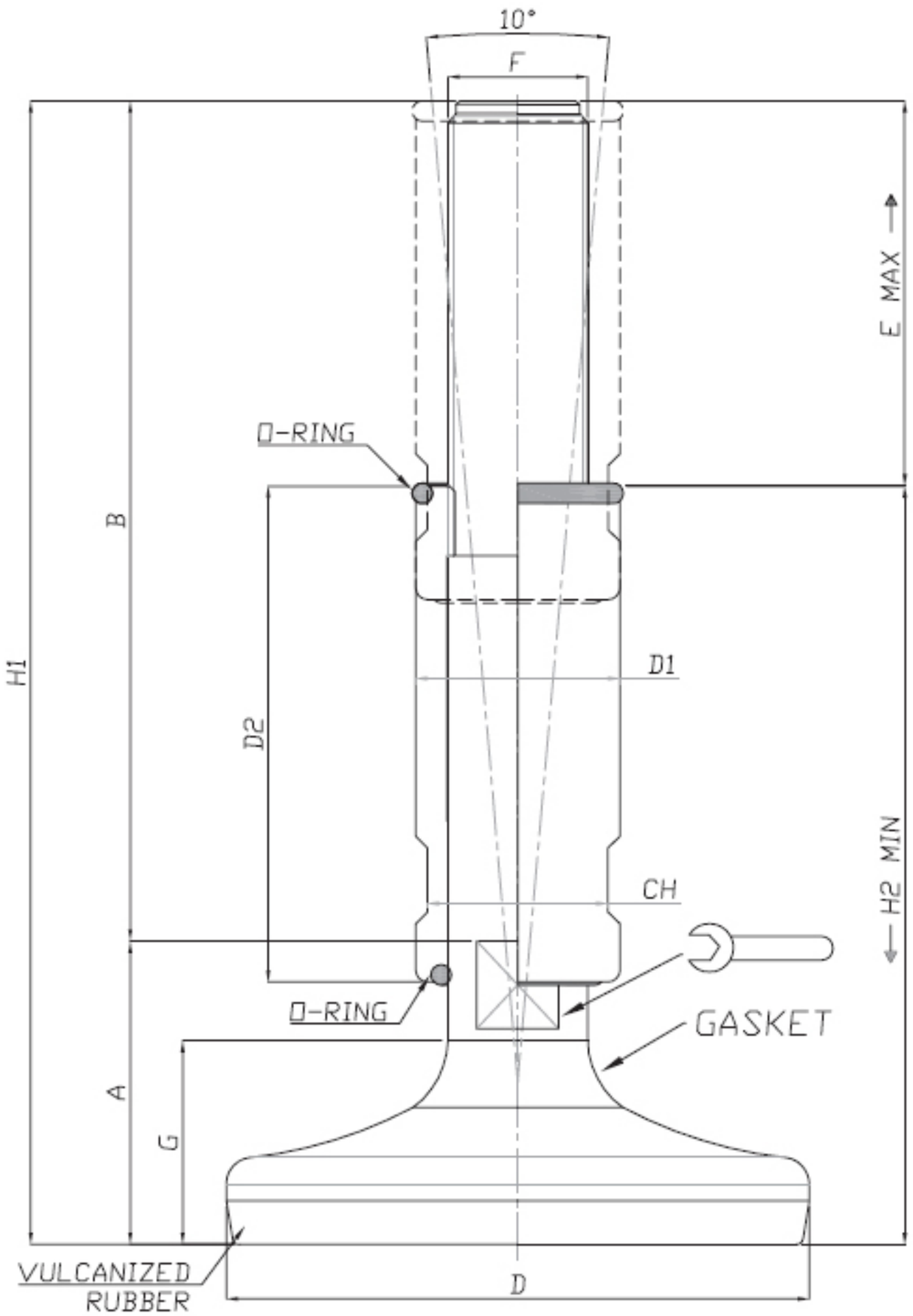
10°
F
E MAX
O-RING
B
H1
D2
D1
CH
H2 MIN
O-RING
GASKET
A
G
VULCANIZED
RUBBER
D

CODE	REGULATION STROKE	MAIN DIMENSIONS											STATIC LOAD
		A	B	D		D1	D2	F	G	CH	H1	H2	Lbs
27002/US	40mm	48	144	Ø80	13	24	60	M16	30	20	192	126	2248
27004/US	40mm	48	144	Ø80	17	30	60	M20	30	26	192	126	2248
27006/US	65mm	48	194	Ø80	17	30	85	M20	30	26	242	176	2248
27020/US	40mm	52	144	Ø100	13	24	60	M16	34	20	196	130	3372
27022/US	40mm	52	144	Ø100	17	30	60	M20	34	26	196	130	3372
27024/US	40mm	52	144	Ø100	20	35	60	M24	34	30	196	130	3372
27026/US	65mm	52	194	Ø100	17	30	85	M20	34	26	246	180	3372
27028/US	65mm	52	194	Ø100	20	35	85	M24	34	30	246	180	3372
27030/US	40mm	55	144	Ø120	13	24	60	M16	37	20	199	133	6744
27032/US	40mm	55	144	Ø120	17	30	60	M20	37	26	199	133	6744
27034/US	40mm	55	144	Ø120	20	35	60	M24	37	30	199	133	6744
27036/US	65mm	55	194	Ø120	17	30	85	M20	37	26	249	183	6744
27038/US	65mm	55	194	Ø120	20	35	85	M24	37	30	249	183	6744

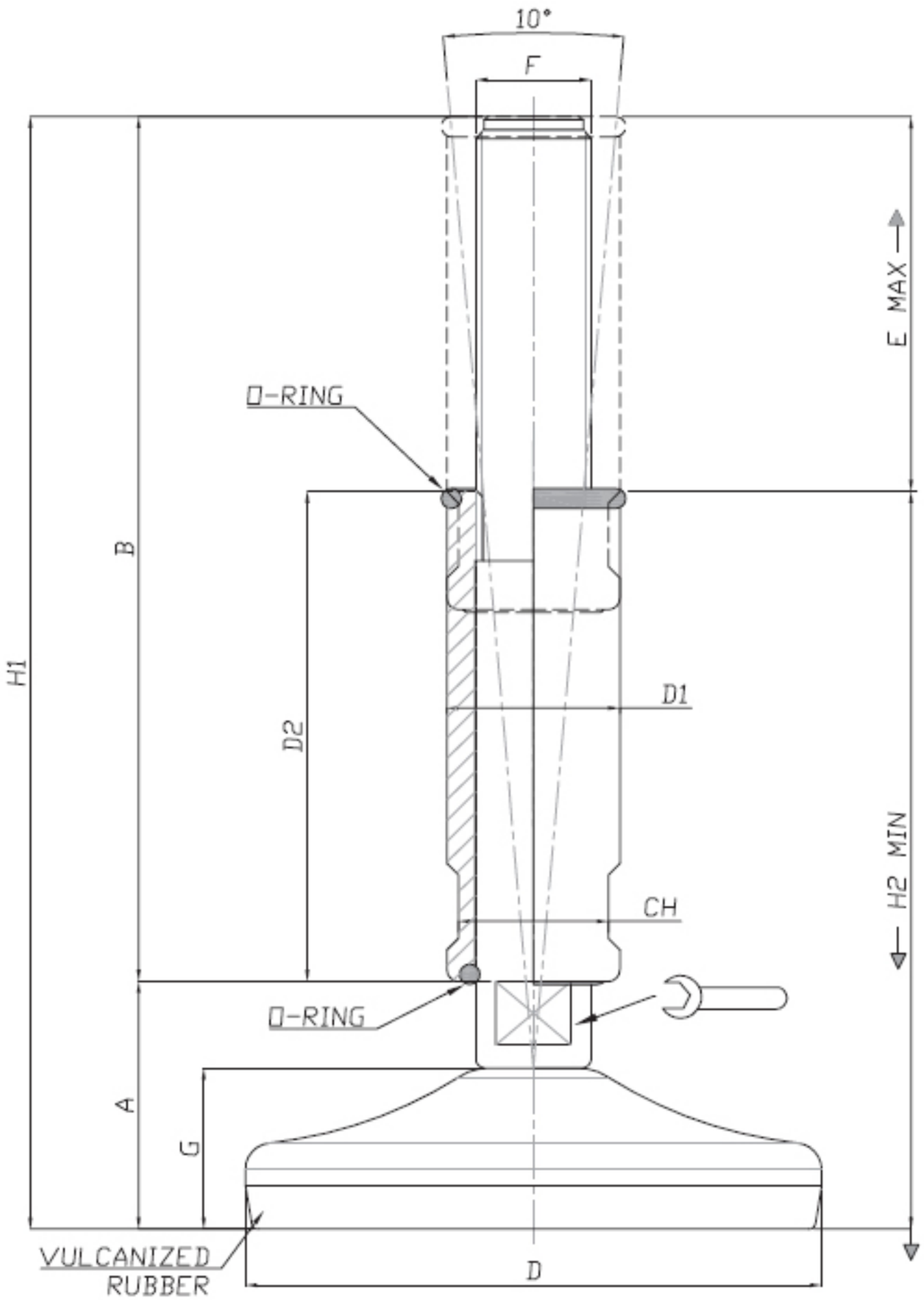
10°
F
E MAX
O-RING
B
H1
D1
D2
H2 MIN
CH
O-RING
A
G
VULCANIZED
RUBBER
D

CODE	REGULATION STROKE	MAIN DIMENSIONS											STATIC LOAD
		A	B	D		D1	D2	F	G	CH	H1	H2	Lbs
27000	40mm	38	125	Ø80	17	24	60	M16	25	20	163	98	2248
27002	40mm	38	150	Ø80	17	24	60	M16	25	20	188	123	2248
27004	40mm	38	150	Ø80	17	30	60	M20	25	26	188	123	2248
27006	65mm	38	200	Ø80	17	30	85	M20	25	26	238	173	2248
27020	40mm	43	150	Ø100	17	24	60	M16	30	20	193	128	3372
27022	40mm	43	150	Ø100	17	30	60	M20	30	26	193	128	3372
27024	40mm	44	150	Ø100	20	35	60	M24	30	30	194	129	3372
27026	40mm	44	150	Ø100	26	42	60	M30	30	36	194	129	3372
27027	65mm	43	200	Ø100	17	30	85	M20	30	26	243	178	3372
27028	65mm	44	200	Ø100	20	35	85	M24	30	30	244	179	3372
27029	65mm	44	200	Ø100	26	42	85	M30	30	36	244	179	3372
27030	40mm	47	150	Ø120	17	24	60	M16	32	20	197	132	6744
27032	40mm	47	150	Ø120	17	30	60	M20	32	26	197	132	6744
27034	40mm	47	150	Ø120	20	35	60	M24	32	30	197	132	6744
27036	40mm	49	150	Ø120	26	42	60	M30	32	36	199	134	6744
27038	65mm	47	200	Ø120	17	30	85	M20	32	26	247	182	6744
27040	65mm	47	200	Ø120	20	35	85	M24	32	30	247	182	6744
27042	65mm	49	200	Ø120	26	42	85	M30	32	36	249	184	6744

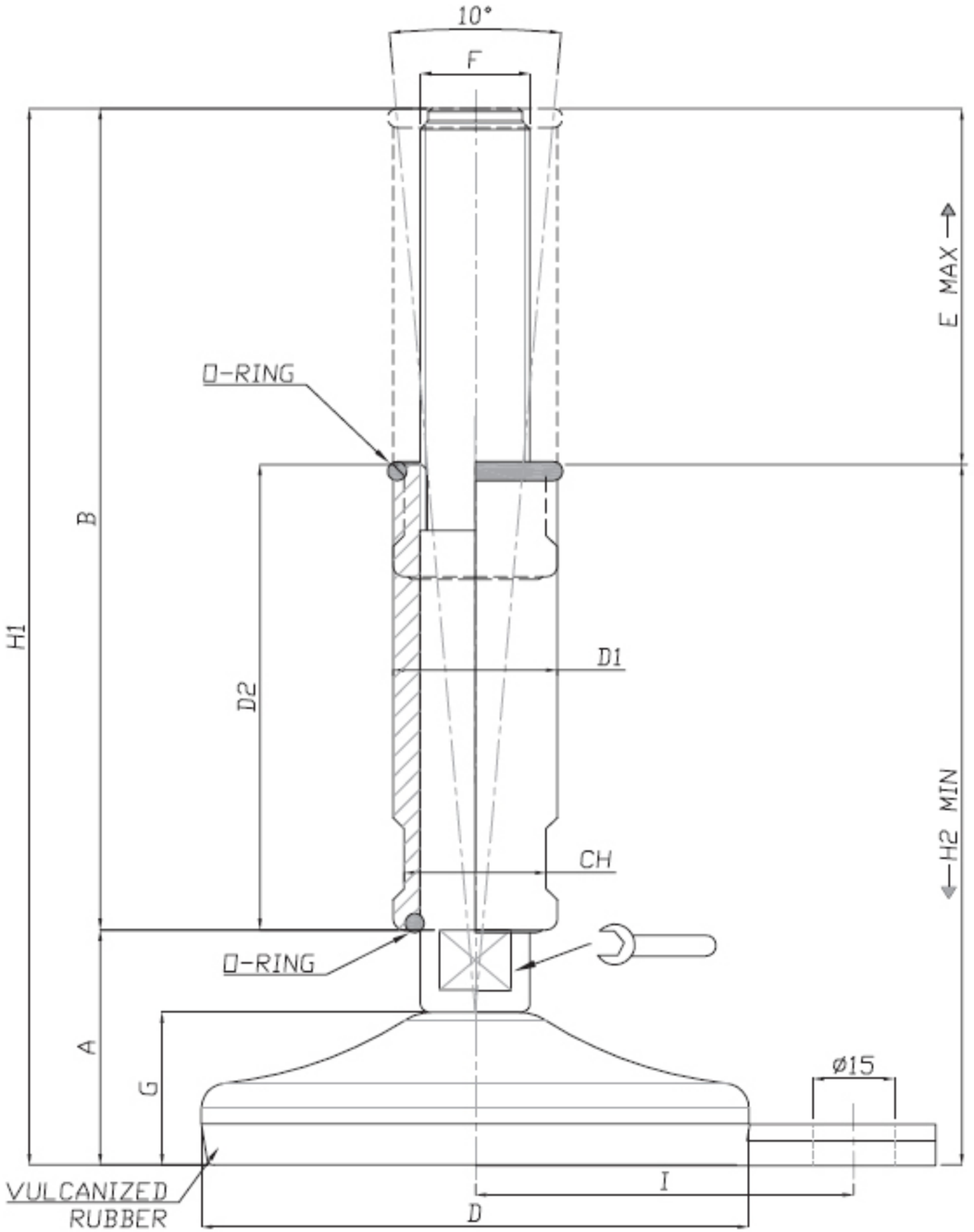
10°
F
E MAX
O-RING
B
H1
D2
D1
H2 MIN
CH
O-RING
A
G
ø15
VULCANIZED
RUBBER
I
D

CODE	REGULATION STROKE	MAIN DIMENSIONS												STATIC LOAD
		A	B	D		D1	D2	F	G	CH	H1	H2	I	Lbs
27000/F	40mm	38	125	Ø80	17	24	60	M16	25	20	163	98	54	2248
27002/F	40mm	38	150	Ø80	17	24	60	M16	25	20	188	123	54	2248
27004/F	40mm	38	150	Ø80	17	30	60	M20	25	26	188	123	54	2248
27006/F	65mm	38	200	Ø80	17	30	85	M20	25	26	238	173	54	2248
27020/F	40mm	43	150	Ø100	17	24	60	M16	30	20	193	128	69	3372
27022/F	40mm	43	150	Ø100	17	30	60	M20	30	26	193	128	69	3372
27024/F	40mm	44	150	Ø100	20	35	60	M24	30	30	194	129	69	3372
27026/F	40mm	44	150	Ø100	26	42	60	M30	30	36	194	129	69	3372
27027/F	65mm	43	200	Ø100	17	30	85	M20	30	26	243	178	69	3372
27028/F	65mm	44	200	Ø100	20	35	85	M24	30	30	244	179	69	3372
27029/F	65mm	44	200	Ø100	26	42	85	M30	30	36	244	179	69	3372

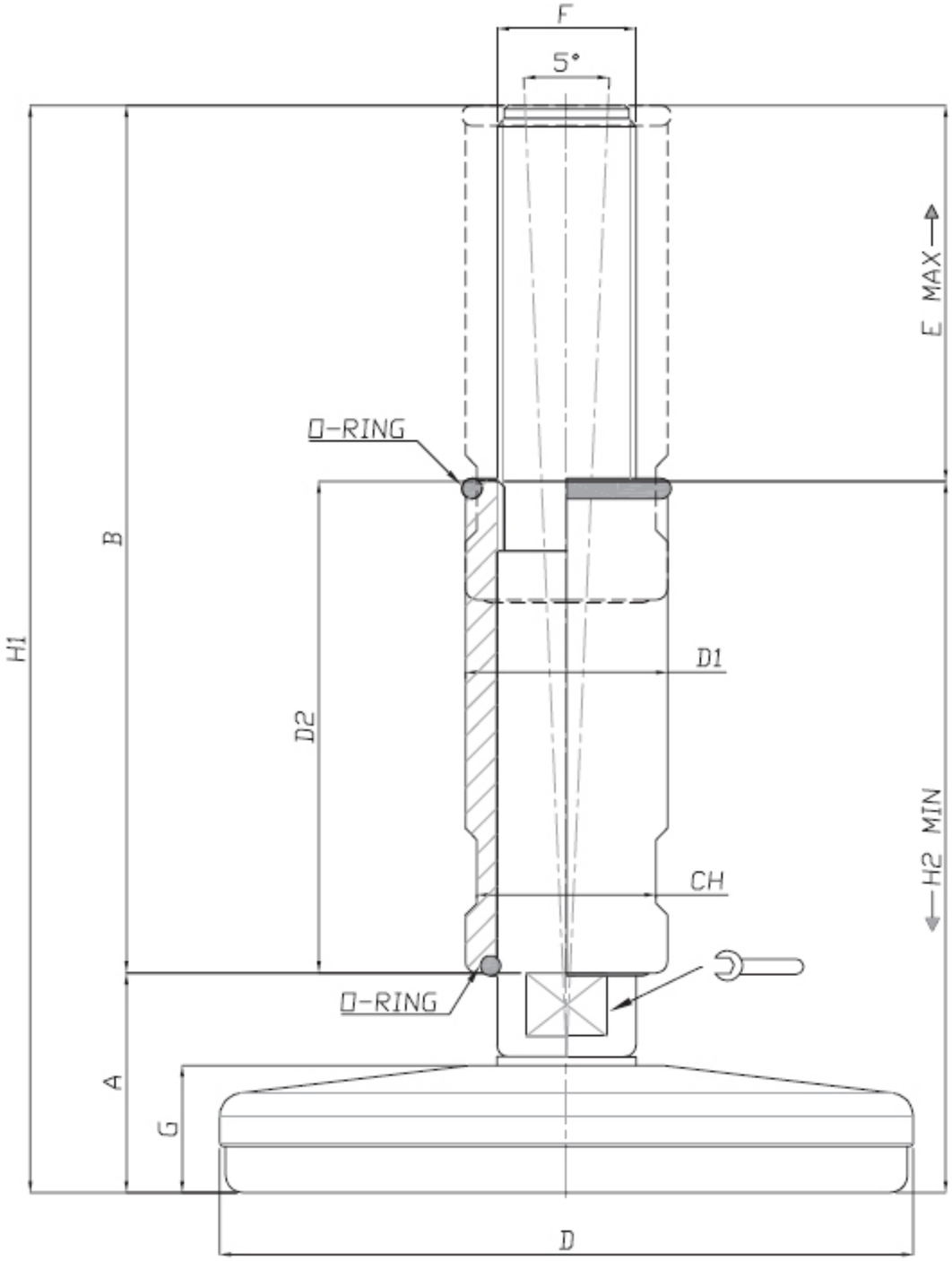
F
5°
E MAX
O-RING
B
H1
D1
D2
H2 MIN
CH
O-RING
A
G
D

CODE	REGULATION STROKE	MAIN DIMENSIONS											STATIC LOAD
		A	B	D		D1	D2	F	G	CH	H1	H2	Lbs
15298	40mm	28	125	Ø75	16	24	60	M16	18	20	153	88	4496
15299	40mm	38	150	Ø100	17	24	60	M16	23	20	188	123	6744
15300	40mm	38	150	Ø100	17	30	60	M20	23	26	188	123	6744
15301	40mm	38	150	Ø100	20	35	60	M24	23	30	188	123	6744
15302	40mm	38	150	Ø100	26	42	60	M30	23	36	188	123	6744
15309	65mm	38	200	Ø100	17	30	85	M20	23	26	238	173	6744
15310	65mm	38	200	Ø100	26	35	85	M24	23	30	238	173	6744
15311	65mm	38	200	Ø100	26	42	85	M30	23	36	238	173	6744
15303	40mm	38	150	Ø120	17	30	60	M20	23	26	188	123	8992
15304	40mm	38	150	Ø120	20	35	60	M24	23	30	188	123	8992
15305	40mm	38	150	Ø120	26	42	60	M30	23	36	188	123	8992
15312	65mm	38	200	Ø120	17	30	85	M20	23	26	238	173	8992
15313	65mm	38	200	Ø120	20	35	85	M24	23	30	238	173	8992
15314	65mm	38	200	Ø120	26	42	85	M30	23	36	238	173	8992
15306	40mm	44	150	Ø150	17	30	60	M20	23	26	194	129	11240
15307	40mm	44	150	Ø150	20	35	60	M24	23	30	194	129	11240
15308	40mm	44	150	Ø150	26	42	60	M30	23	36	194	129	11240
15315	65mm	44	200	Ø150	17	30	85	M20	23	26	244	179	11240
15316	65mm	44	200	Ø150	20	35	85	M24	23	30	244	179	11240
15317	65mm	44	200	Ø150	26	42	85	M30	23	36	244	179	11240

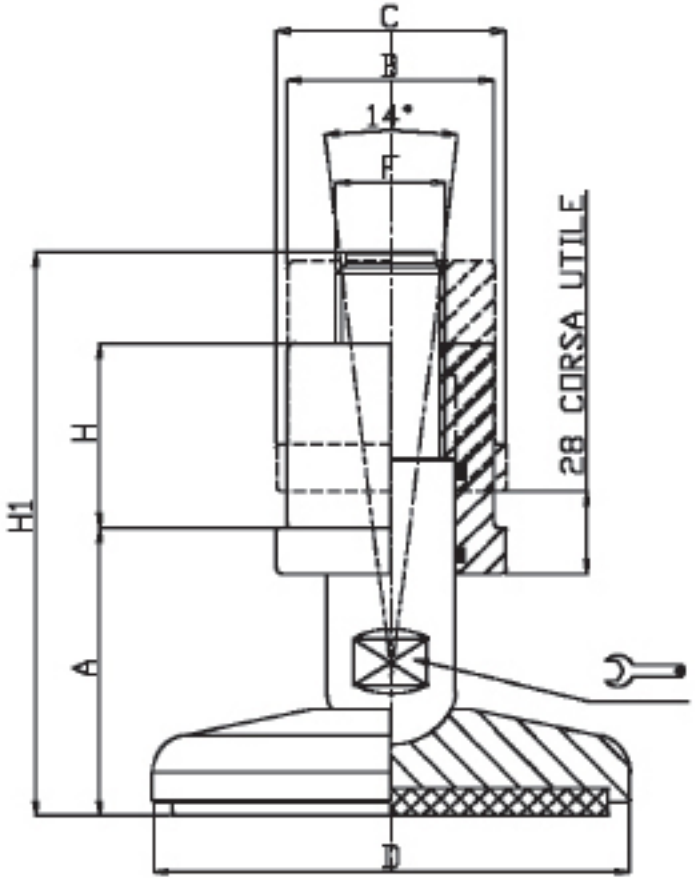

All Threads are Standard Metric Coarse threads as follows:

M8 - 1.25	M16 - 2.00
M10 - 1.50	M20 - 2.50
M12 - 1.75	M24 - 3.00
M14 - 2.00	M30 - 3.50

UNC, UNF, and Metric Fine threads can be specified on all sizes.

CODE		REGULATION STROKE	MAIN DIMENSIONS								STATIC LOAD
STANDARD	ANTISLIP		A	B	C		D	F	H	H1	Lbs
16000	16001	18mm	47	45	50	26	Ø100	3/4G	39	120	15735
16002	16003	18mm	47	45	50	26	Ø120	3/4G	39	120	22031
16004	16005	28mm	63	60	65	40	Ø100	1”1/4G	50	151	22480
16006	16007	28mm	63	60	65	40	Ø120	1”1/4G	50	156	33721
16008	16009	28mm	63	60	65	40	Ø160	1”1/4G	50	156	44961

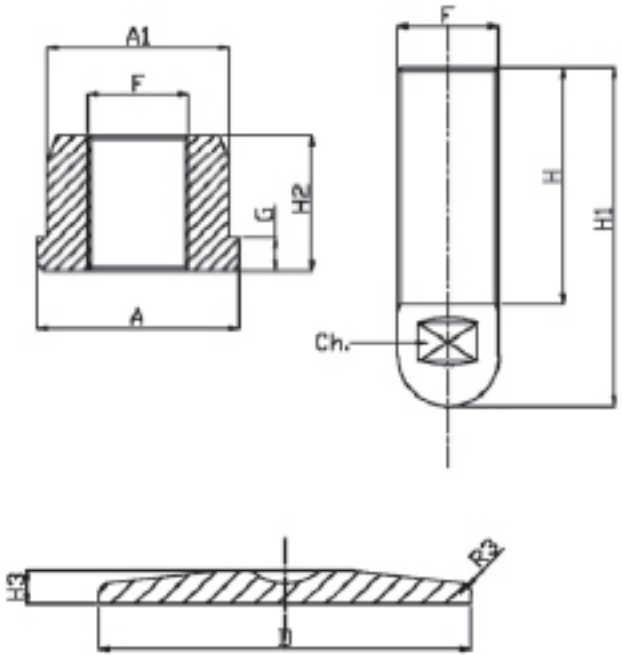

All Threads are Standard Metric
Coarse threads as follows:

M8 - 1.25	M16 - 2.00
M10 - 1.50	M20 - 2.50
M12 - 1.75	M24 - 3.00
M14 - 2.00	M30 - 3.50

UNC, UNF, and Metric Fine threads
can be specified on all sizes.

CODE	MAIN DIMENSIONS										STATIC LOAD
	A	A1	G	CH	D	F	H	H1	H2	H3	Lbs
16010	Ø60	Ø54	8	17	80	M20	70	100	25	10	7868
16030	Ø60	Ø54	10	20	100	M24	70	100	40	10	15736
16031	Ø60	Ø54	10	26	120	M30	70	100	40	10	17984
16041	Ø80	Ø75	10	26	120	M30	100	140	25	10	17984
16050	Ø60	Ø54	10	36	150	M40	100	140	50	15	26977
16051	Ø60	Ø54	10	36	200	M40	100	140	50	15	26977

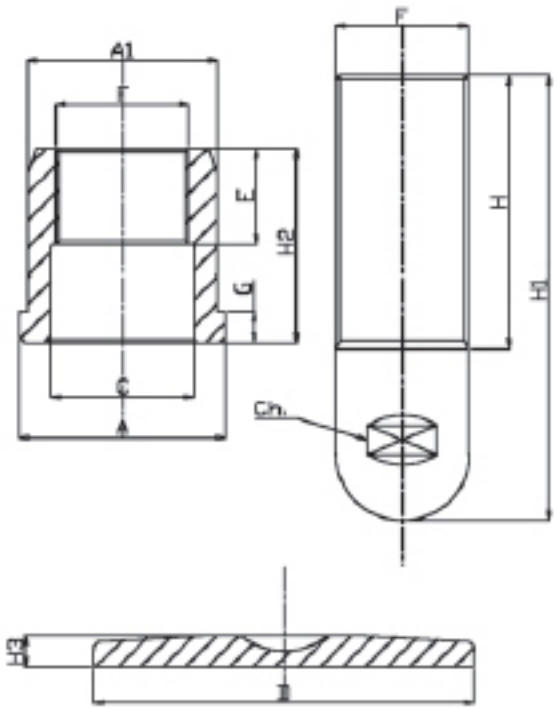

All Threads are Standard Metric Coarse threads as follows:

M8 - 1.25	M16 - 2.00
M10 - 1.50	M20 - 2.50
M12 - 1.75	M24 - 3.00
M14 - 2.00	M30 - 3.50

UNC, UNF, and Metric Fine threads can be specified on all sizes.

CODE	MAIN DIMENSIONS												STATIC LOAD
	A	A1	C	G	E	CH	D	F	H	H1	H2	H3	Lbs
16021	Ø50	Ø45	Ø32	10	20	26	100	3/4 GAS	50	110	50	10	15736
16040	Ø60	Ø55	Ø38	10	30	30	120	1” GAS	85	140	60	10	20232
16042	Ø60	Ø55	Ø45	10	30	36	120	1” 1/4 GAS	85	140	60	10	22480

MODULAR TEKNOCLEAN SYSTEM

CODE	MAIN DIMENSIONS				
	A	A1	G	F	H2
B40M20	40	32	5	M20	35
B40M24	40	32	5	M24	35
B50M24	50	45	10	M24	30
B50M30	50	45	10	M30	30
B60M20	60	54	10	M20	25
B60M24	60	54	10	M24	30
B60M30	60	54	10	M30	30
B60M40	60	54	10	M40	50
B80M24	80	75	10	M24	25
B80M30	80	75	10	M30	30
B80M40	80	75	10	M40	40

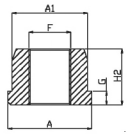

CODE	MAIN DIMENSIONS				
	F	H	H1	Regolation Key	Regolation Hole
SM20-100	M20	70	100	17	
SM24-100	M24	70	100	20	
SM30-100	M30	70	100	26	
SM30-140	M30	100	140	26	
SM40-140	M40	100	140	36	
SM20-100F	M20	70	100		10,5
SM24-100F	M24	70	100		10,5
SM30-100F	M30	70	100		12,5
SM30-140F	M30	100	140		12,5
SM40-140F	M40	100	140		12,5

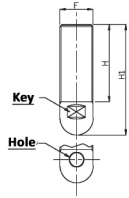
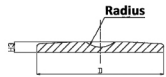
CODE	MAIN DIMENSIONS		
	A	A1	G
P80M20	80	10	10 per M20
P100M24	100	10	12 per M24
P100M30	100	10	15 per M30
P120M30	120	10	15 per M30
P120M40	120	10	20 per M40
P150M30	150	15	15 per M30
P150M40	150	15	20 per M40
P200M40	200	15	20 per M40