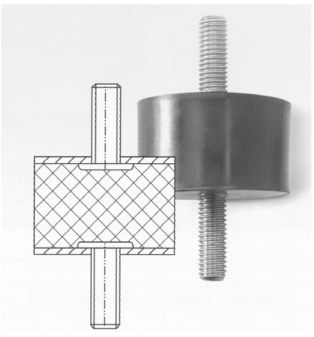

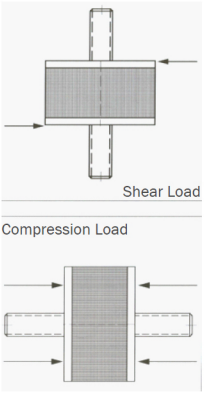

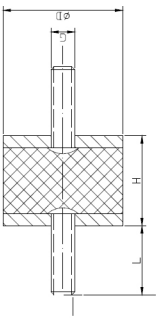

Part Number	Dia. x Heigth mm (Inch) (D) x (H)	Thread (G)	Length mm (Inch) (L)	Thickness mm (Inch) (S)	Quality NR ShoreA Duro	Compression Max. Static Load N	Compression Max. Static Load lbs	Compression Spring Rate Ks N/mm	Compression Spring Rate Ks lbs/in	Shear Max. Static Load N	Shear Max. Static Load lbs	Shear Spring Rate Ks N/mm	Shear Spring Rate Ks lbs/in
9764GF	8 x 8	UNC4-40	6	1	43	23	5	53	300	8	2	10	57
9764AF	(.31) x (.31)		(.24)	(.04)	57	43	10	98	554	15	3	19	105
9764KU					68	69	16	159	899	24	5	30	170
9797GF	8 x 8	UNC6-32	6	1	43	18	4	23	130	6	1	5	28
9797AF	(.31) x (.31)		(.24)	(.04)	57	33	7	43	240	11	2	9	52
9797KU					68	54	12	69	390	18	4	15	85
9712GF	9.7 x 6.4	UNC8-32	10	1	43	16	4	15	85	5	1	4	23
9712AF	(.38) x (.25)		(.39)	(.04)	57	30	7	28	157	9	2	7	42
9712KF					68	48	11	45	254	15	3	12	68
1608G6F13	15.8 x 8	UNF1/4-28	12.7	1.5	43	103	23	258	1458	34	8	29	164
1608A6F13	(.62) x (.31)		(.5)	(.06)	57	191	43	477	2697	63	14	54	303
1608K6F13					68	309	69	774	4374	102	23	87	492
1613G6F13	15.8 x 12.7	UNF1/4-28	12.7	1.5	43	54	12	56	316	18	4	12	68
1613A6F13	(.62) x (.5)		(.5)	(.06)	57	100	22	104	585	33	7	22	125
1613K6F13					68	162	36	168	949	54	12	36	203
1616G6F13	15.8 x 15.8	UNF1/4-28	12.7	1.5	43	49	11	38	215	16	4	9	51
1616A6F13	(.62) x (.62)		(.5)	(.06)	57	91	20	70	397	30	7	17	94
1616K6F13					68	147	33	114	644	48	11	27	153
2015GF16	20 x 15	UNF10-32	10	2	43	89	20	81	458	30	7	16	90
2015AF16	(.79) x (.59)		(.39)	(.08)	57	165	37	150	847	56	12	30	167
2015KF16					68	267	60	243	1373	90	20	48	271
2020GF10	20 x 20	UNF10-32	10	2	43	76	17	47	266	25	6	11	62
2020AF10	(.79) x (.79)		(.39)	(.08)	57	141	32	87	491	46	10	20	115
2020KF10					68	228	51	141	797	75	17	33	186
2025GF10	20 x 25	UNF10-32	10	2	43	70	16	33	186	23	5	9	51
2025AF10	(.79) x (.98)		(.39)	(.08)	57	130	29	61	345	43	10	17	94
2025KF10					68	210	47	99	559	69	16	27	153
2030GF10	20 x 30	UNF10-32	10	2	43	66	15	25	141	22	5	7	40
2030AF10	(.79) x (1.18)		(.39)	(.08)	57	122	27	46	261	41	9	13	73
2030KF10					68	198	45	75	424	66	15	21	119
2510GF10	25.4 x 10	UNF10-32	10	2	43	263	59	438	2475	88	47	65	367
2510AF10	(1) x (.39)		(.39)	(.08)	57	487	109	810	4579	163	37	120	680
2510KF10					68	789	177	1314	7426	264	59	195	1102

Part Number	Dia. x Heigth mm (Inch) (D) x (H)	Thread (G)	Length mm (Inch) (L)	Thickness mm (Inch) (S)	Quality NR ShoreA Duro	Compression Max. Static Load N	Compression Max. Static Load lbs	Compression Spring Rate Ks N/mm	Compression Spring Rate Ks lbs/in	Shear Max. Static Load N	Shear Max. Static Load lbs	Shear Spring Rate Ks N/mm	Shear Spring Rate Ks lbs/in
2513GF10	25.4 x 12.7	UNF10-32	10	2	43	183	41	203	1147	61	31	38	215
2513AF10	(1) x (.5)		(.39)	(.08)	57	339	76	376	2122	113	25	70	397
2513KF10					68	549	123	609	3442	183	41	114	644
2515GF10	25.4 x 15.7	UNF10-32	10	2	43	159	36	145	819	53	12	25	141
2515AF10	(1) x (.62)		(.39)	(.08)	57	294	66	268	1516	98	22	46	261
2515KF10					68	477	107	435	2458	159	36	75	424
2519GF10	25.4 x 19.1	UNF10-32	10	2	43	134	30	89	503	45	10	19	107
2519AF10	(1) x (.75)		(.39)	(.08)	57	248	56	165	930	83	19	35	199
2519KF10					68	402	90	267	1509	135	30	57	322
2525GF10	25.4 x 25.4	UNF10-32	10	2	43	117	26	55	311	39	9	13	73
2525AF10	(1) x (1)		(.39)	(.08)	57	216	49	102	575	72	16	24	136
2525KF10					68	351	79	165	932	117	26	39	220
5015GF28	50 x 15	UNF3/8-24	25	2	43	1452	326	1613	9115	484	109	125	706
5015AF28	(1.97) x (.59)		(.98)	(.08)	57	2686	604	2984	16864	895	201	231	1307
5015KF28					68	4356	979	4839	27346	1452	326	375	2119
5020GF28	50 x 20	UNC3/8-16	25	2	43	905	203	646	3651	302	68	80	452
5020AF28	(1.97) x (.79)		(.98)	(.08)	57	1674	376	1195	6754	559	126	148	836
5020KF28					68	2715	610	1938	10952	906	204	240	1356
5025GF28	50 x 25	UNF3/8-24	25	2	43	703	158	370	2091	234	53	59	333
5025AF28	(1.97) x (.98)		(.98)	(.08)	57	1301	292	685	3868	433	97	109	617
5025KF28					68	2109	474	1110	6273	702	158	177	1000
5030GF28	50 x 30	UNF3/8-24	25	2	43	603	136	251	1418	201	47	47	266
5030AF28	(1.97) x (1.18)		(.98)	(.08)	57	1116	251	464	2624	372	84	87	491
5030KF28					68	1809	407	753	4255	603	136	141	797
5035GF28	50 x 35	UNF3/8-24	25	2	43	544	122	187	1057	181	31	39	220
5035AF28	(1.97) x (1.38)		(.98)	(.08)	57	1006	226	346	1955	335	75	72	408
5035KF28					68	1632	367	561	3170	543	122	117	661
5040GF28	50 x 40	UNF3/8-24	25	2	43	505	114	149	842	168	38	33	186
5040AF28	(1.97) x (1.57)		(.98)	(.08)	57	934	210	276	1558	311	70	61	345
5040KF28					68	1515	341	447	2526	504	113	99	559
5045GF28	50 x 45	UNF3/8-24	25	2	43	479	108	123	695	160	36	29	164
5045AF28	(1.97) x (1.77)		(.98)	(.08)	57	886	199	228	1286	296	67	54	303
5045KF28					68	1437	323	369	2085	480	108	87	492

Part Number	Dia. x Heigth mm (Inch) (D) x (H)	Thread (G)	Length mm (Inch) (L)	Thickness mm (Inch) (S)	Quality NR ShoreA Duro	Compression Max. Static Load N	Compression Max. Static Load lbs	Compression Spring Rate Ks N/mm	Compression Spring Rate Ks lbs/in	Shear Max. Static Load N	Shear Max. Static Load lbs	Shear Spring Rate Ks N/mm	Shear Spring Rate Ks lbs/in
5050GF28	50 x 50	UNF3/8-24	28	2	43	459	103	104	588	153	34	25	141
5050AF28	(1.97) x (1.97)		(1.10)	(.08)	57	849	191	192	1087	283	64	46	261
5050KF28					68	1377	310	312	1763	459	103	75	424
5075GF28	50 x 75	UNF3/8-24	28	3	43	408	92	59	333	136	31	16	90
5075AF28	(1.97) x (2.95)		(1.10)	(.12)	57	755	170	109	617	252	57	30	167
5075KF28					68	1224	275	177	1000	408	92	48	271
5015G13F25	50 x 15	UNC1/2-20	25	3	43	307	69	99	559	102	23	23	130
5015A13F25	(1.97) x (.59)		(.98)	(.12)	57	568	128	183	1035	189	42	43	240
5015K13F25					68	921	207	297	1678	306	69	69	390
5020G13F25	50 x 20	UNC1/2-20	25	3	43	292	66	81	458	97	22	20	113
5020A13F25	(1.97) x (.79)		(.98)	(.12)	57	540	121	150	847	179	40	37	209
5020K13F25					68	876	197	243	1373	291	65	60	339
5025G13F25	50 x 25	UNC1/2-20	25	3	43	703	158	370	2091	234	53	59	333
5025A13F25	(1.97) x (.98)		(.98)	(.12)	57	1301	292	685	3868	433	97	109	617
5025K13F25					68	2109	474	1110	6273	702	158	177	1000
5030G13F25	50 x 30	UNC1/2-20	25	3	43	603	136	251	1418	201	47	47	266
5030A13F25	(1.97) x (1.18)		(.98)	(.12)	57	1116	251	464	2624	372	84	87	491
5030K13F25					68	1809	407	753	4255	603	136	141	797
5035G13F25	50 x 35	UNC1/2-20	25	3	43	544	122	187	1057	181	31	39	220
5035A13F25	(1.97) x (1.38)		(.98)	(.12)	57	1006	226	346	1955	335	75	72	408
5035K13F25					68	1632	367	561	3170	543	122	117	661
5040G13F25	50 x 40	UNC1/2-20	25	3	43	505	114	149	842	168	38	33	186
5040A13F25	(1.97) x (1.57)		(.98)	(.12)	57	934	210	276	1558	311	70	61	345
5040K13F25					68	1515	341	447	2526	504	113	99	559
5045G13F25	50 x 45	UNC1/2-20	25	3	43	479	108	123	695	160	36	29	164
5045A13F25	(1.97) x (1.77)		(.98)	(.12)	57	886	199	228	1286	296	67	54	303
5045K13F25					68	1437	323	369	2085	480	108	87	492
5050G13F25	50 x 50	UNC1/2-20	25	3	43	459	103	104	588	153	34	25	141
5050A13F25	(1.97) x (1.97)		(.98)	(.12)	57	849	191	192	1087	283	64	46	261
5050K13F25					68	1377	310	312	1763	459	103	75	424
5075G13F25	50 x 75	UNC1/2-20	25	3	43	408	92	59	333	136	31	16	90
5075A13F25	(1.97) x (2.95)		(.98)	(.12)	57	755	170	109	617	252	57	30	167
5075K13F25					68	1224	275	177	1000	408	92	48	271

Part Number	Dia. x Heigth mm (Inch) (D) x (H)	Thread (G)	Length mm (Inch) (L)	Thickness mm (Inch) (S)	Quality NR ShoreA Duro	Compression Max. Static Load N	Compression Max. Static Load lbs	Compression Spring Rate Ks N/mm	Compression Spring Rate Ks lbs/in	Shear Max. Static Load N	Shear Max. Static Load lbs	Shear Spring Rate Ks N/mm	Shear Spring Rate Ks lbs/in
7525GF38	75 x 25	UNC1/2-20	38	3	43	2240	504	1179	6663	747	168	133	752
7525AF38	(2.95) x (.98)		(1.50)	(.12)	57	4144	932	2181	12326	1382	311	246	1390
7525KF38					68	6720	1511	3537	19988	2241	504	399	2255
7530GF38	75 x 30	UNC1/2-20	38	3	43	1809	407	754	4261	603	136	105	593
7530AF38	(2.95) x (1.18)		(1.50)	(.12)	57	3347	752	1395	7883	1116	251	194	1098
7530KF38					68	5427	1220	2262	12783	1809	407	315	1780
7540GF38	75 x 40	UNC1/2-20	38	3	43	1404	316	413	2334	468	105	74	418
7540AF38	(2.95) x (1.57)		(1.50)	(.12)	57	2597	584	764	4318	866	195	137	774
7540KF38					68	4212	947	1239	7002	1404	316	222	1255
7550GF38	75 x 50	UNC1/2-20	38	3	43	1216	273	276	1560	405	47	47	266
7550AF38	(2.95) x (1.97)		(1.50)	(.12)	57	2250	506	511	2886	749	168	87	491
7550KF38					68	3648	820	828	4679	1215	273	141	797
7555GF38	75 x 55	UNC1/2-20	38	3	43	1157	260	236	1334	386	31	39	220
7555AF38	(2.95) x (2.17)		(1.50)	(.12)	57	2140	481	437	2467	714	161	72	408
7555KF38					68	3471	780	708	4001	1158	260	117	661
7560GF38	75 x 60	UNC1/2-20	38	3	43	1110	250	206	1164	370	83	47	266
7560AF38	(2.95) x (2.36)		(1.50)	(.12)	57	2054	462	381	2154	685	154	87	491
7560KF38					68	3330	749	618	3492	1110	250	141	797
7575GF38	75 x 75	UNC1/2-20	38	3	43	1018	229	148	836	339	76	25	141
7575AF38	(2.95) x (2.95)		(1.50)	(.12)	57	1883	423	274	1547	627	141	46	261
7575KF38					68	3054	687	444	2509	1017	229	75	424
75100GF38	75 x 100	UNC1/2-20	38	3	43	938	211	100	565	313	70	16	90
75100AF38	(2.95) x (3.94)		(1.50)	(.12)	57	1735	390	185	1045	579	130	30	167
75100KF38					68	2814	633	300	1695	939	211	48	271
8050GF	80 x 50	UNC1/2-20	38	3	43	1430	321	325	1837	477	107	65	367
8050AF	(3.15) x (1.97)		(1.50)	(.12)	57	2646	595	601	3398	882	198	120	680
8050KF					68	4290	964	975	5510	1431	322	195	1102
8057GF	80 x 57	UNC1/2-20	38	3	43	1331	299	261	1475	444	100	56	316
8057AF	(3.15) x (2.24)		(1.50)	(.12)	57	2462	554	483	2729	821	185	104	585
8057KF					68	3993	898	783	4425	1332	299	168	949
8075GF	80 x 75	UNC1/2-20	38	3	43	1183	266	171	966	394	89	42	237
8075AF	(3.15) x (2.95)		(1.50)	(.12)	57	2189	492	316	1788	729	164	78	439
8075KF					68	3549	798	513	2899	1182	266	126	712