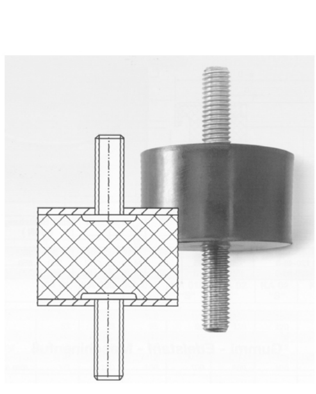

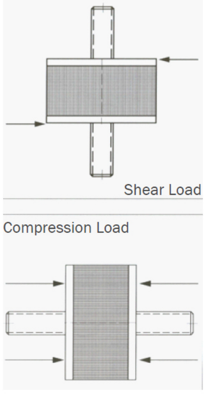

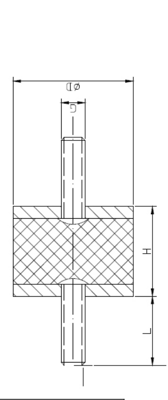

Part Number	Dia. x Heigth mm (Inch) (D) x (H)	Thread (G)	Length mm (Inch) (L)	Thickness mm (Inch) (S)	Quality NR ShoreA Duro	Compression Max. Static Load N	Compression Max. Static Load lbs	Compression Spring Rate Ks N/mm	Compression Spring Rate Ks lbs/in	Shear Max. Static Load N	Shear Max. Static Load lbs	Shear Spring Rate Ks N/mm	Shear Spring Rate Ks lbs/in
0808GU	8 x 8 (.31) x (.31)	UNC4-40	6 (.24)	1 (.04)	43	12	3	21	119	4	1	5	28
0808AU					57	22	5	39	220	7	2	9	52
0808KU					68	36	8	63	356	12	3	15	85
0808G3U	8 x 8 (.31) x (.31)	UNC6-32	6 (.24)	1 (.04)	43	12	3	21	119	4	1	5	28
0808A3U					57	22	5	39	220	7	2	9	52
0808K3U					68	36	8	63	356	12	3	15	85
9764GU10	9.7 x 6.4 (.38) x (.25)	UNC8-32	10 (.39)	1 (.04)	43	23	5	53	300	8	2	10	57
9764AU10					57	43	10	98	554	15	3	19	105
9764KU10					68	69	16	159	899	24	5	30	170
9797G3U10	9.7 x 9.7 (.38) x (.38)	UNC6-32	10 (.39)	1 (.04)	43	18	4	23	130	6	1	5	28
9797A3U10					57	33	7	43	240	11	2	9	52
9797K3U10					68	54	12	69	390	18	4	15	85
9797GU10	9. x 9.7 (.35) x (.38)	UNC8-32	10 (.39)	1 (.04)	43	18	4	23	130	6	1	5	28
9797AU10					57	33	7	43	240	11	2	9	52
9797KU10					68	54	12	69	390	18	4	15	85
9712G3U10	9.7 x 12.7 (.38) x (.5)	UNC6-32	10 (.39)	1 (.04)	43	16	4	15	85	5	1	4	23
9712A3U10					57	30	7	28	157	9	2	7	42
9712K3U10					68	48	11	45	254	15	3	12	68
9712GU10	9.7 x 12.7 (.38) x (.5)	UNC8-32	10 (.39)	1 (.04)	43	16	4	15	85	5	1	4	23
9712AU10					57	30	7	28	157	9	2	7	42
9712KU10					68	48	11	45	254	15	3	12	68
1313GU13	12.7 x 12.7 (.5) x (.5)	UNC8-32	12.7 (.5)	1.5 (.06)	43	32	7	30	170	11	2	7	40
1313AU13					57	59	13	56	314	20	5	13	73
1313KU13					68	96	22	90	509	33	7	21	119
1608GU13	15.8 x 8 (.62) x (.31)	UNC8-32	12.7 (.5)	1.5 (.06)	43	103	23	258	1458	34	8	29	164
1608AU13					57	191	43	477	2697	63	14	54	303
1608KU13					68	309	69	774	4374	102	23	87	492
1613GU13	15.8 x 12.7 (.62) x (.5)	UNC8-32	12.7 (.5)	1.5 (.06)	43	57	13	63	356	19	4	13	73
1613AU13					57	105	24	117	659	35	8	24	136
1613KU13					68	171	38	189	1068	57	13	39	220
1616GU13	15.8 x 15.8 (.62) x (.62)	UNC8-32	12.7 (.5)	1.5 (.06)	43	50	11	41	232	17	4	10	57
1616AU13					57	93	21	76	429	31	7	19	105
1616KU13					68	150	34	123	695	51	11	30	170

Part Number	Dia. x Heigth mm (Inch) (D) x (H)	Thread (G)	Length mm (Inch) (L)	Thickness mm (Inch) (S)	Quality NR ShoreA Duro	Compression Max. Static Load N	Compression Max. Static Load lbs	Compression Spring Rate Ks N/mm	Compression Spring Rate Ks lbs/in	Shear Max. Static Load N	Shear Max. Static Load lbs	Shear Spring Rate Ks N/mm	Shear Spring Rate Ks lbs/in
1608G6U13	15.8 x 8 (.62) x (.31)	UNC1/4-20	12.7 (.5)	1.5 (.06)	43	103	23	258	1458	34	8	29	164
1608A6U13					57	191	43	477	2697	63	14	54	303
1608K6U13					68	309	69	774	4374	102	23	87	492
1613G6U13	15.8 x 12.7 (.62) x (.5)	UNC1/4-20	12.7 (.5)	1.5 (.06)	43	57	13	63	356	19	4	13	73
1613A6U13					57	105	24	117	659	35	8	24	136
1613K6U13					68	171	38	189	1068	57	13	39	220
1616G6U13	15.8 x 15.8 (.62) x (.62)	UNC1/4-20	12.7 (.5)	1.5 (.06)	43	50	11	41	232	17	4	10	57
1616A6U13					57	93	21	76	429	31	7	19	105
1616K6U13					68	150	34	123	695	51	11	30	170
2015GU16	20 x 15 (.79) x (.59)	UNC1/4-20	16 (.63)	2 (.08)	43	89	20	81	458	30	7	16	90
2015AU16					57	165	37	150	847	56	12	30	167
2015KU16					68	267	60	243	1373	90	20	48	271
2020GU16	20 x 20 (.79) x (.79)	UNC1/4-20	16 (.63)	2 (.08)	43	76	17	47	266	25	6	11	62
2020AU16					57	141	32	87	491	46	10	20	115
2020KU16					68	228	51	141	797	75	17	33	186
2025GU16	20 x 25 (.79) x (.98)	UNC1/4-20	16 (.63)	2 (.08)	43	70	16	33	186	23	5	9	51
2025AU16					57	130	29	61	345	43	10	17	94
2025KU16					68	210	47	99	559	69	16	27	153
2030GU16	20 x 30 (.79) x (1.18)	UNC1/4-20	16 (.63)	2 (.08)	43	66	15	25	141	22	5	7	40
2030AU16					57	122	27	46	261	41	9	13	73
2030KU16					68	198	45	75	424	66	15	21	119
2510GU19	25.4 x 10 (1) x (.39)	UNC1/4-20	19 (.75)	2 (.08)	43	263	59	438	2475	88	47	65	367
2510AU19					57	487	109	810	4579	163	37	120	680
2510KU19					68	789	177	1314	7426	264	59	195	1102
2513GU19	25.4 x 12.7 (1) x (.5)	UNC1/4-20	19 (.75)	2 (.08)	43	183	41	203	1147	61	31	38	215
2513AU19					57	339	76	376	2122	113	25	70	397
2513KU19					68	549	123	609	3442	183	41	114	644
2515GU19	25.4 x 15.7 (1) x (.62)	UNC1/4-20	19 (.75)	2 (.08)	43	159	36	145	819	53	12	25	141
2515AU19					57	294	66	268	1516	98	22	46	261
2515KU19					68	477	107	435	2458	159	36	75	424
2519GU19	25.4 x 19.1 (1) x (.75)	UNC1/4-20	19 (.75)	2 (.08)	43	134	30	89	503	45	10	19	107
2519AU19					57	248	56	165	930	83	19	35	199
2519KU19					68	402	90	267	1509	135	30	57	322

Part Number	Dia. x Heigth mm (Inch) (D) x (H)	Thread (G)	Length mm (Inch) (L)	Thickness mm (Inch) (S)	Quality NR ShoreA Duro	Compression Max. Static Load N	Compression Max. Static Load lbs	Compression Spring Rate Ks N/mm	Compression Spring Rate Ks lbs/in	Shear Max. Static Load N	Shear Max. Static Load lbs	Shear Spring Rate Ks N/mm	Shear Spring Rate Ks lbs/in
2525GU19	25.4 x 25.4 (1) x (1)	UNC1/4-20	19 (.75)	2 (.08)	43	117	26	55	311	39	9	13	73
2525AU19					57	216	49	102	575	72	16	24	136
2525KU19					68	351	79	165	932	117	26	39	220
2510G8U19	25.4 x 10 (1) x (.39)	UNC5/16-18	19 (.75)	2 (.08)	43	263	59	438	2475	88	47	65	367
2510A8U19					57	487	109	810	4579	163	37	120	680
2510K8U19					68	789	177	1314	7426	264	59	195	1102
2513G8U19	25.4 x 12.7 (1) x (.5)	UNC5/16-18	19 (.75)	2 (.08)	43	183	41	203	1147	61	31	38	215
2513A8U19					57	339	76	376	2122	113	25	70	397
2513K8U19					68	549	123	609	3442	183	41	114	644
2515G8U19	25.4 x 15.7 (1) x (.62)	UNC5/16-18	19 (.75)	2 (.08)	43	159	36	145	819	53	12	25	141
2515A8U19					57	294	66	268	1516	98	22	46	261
2515K8U19					68	477	107	435	2458	159	36	75	424
2519G8U19	25.4 x 19.1 (1) x (.75)	UNC5/16-18	19 (.75)	2 (.08)	43	134	30	89	503	45	10	19	107
2519A8U19					57	248	56	165	930	83	19	35	199
2519K8U19					68	402	90	267	1509	135	30	57	322
2525G5U19	25.4 x 25.4 (1) x (1)	UNC5/16-18	19 (.75)	2 (.08)	43	117	26	55	311	39	9	13	73
2525A8U19					57	216	49	102	575	72	16	24	136
2525K8U19					68	351	79	165	932	117	26	39	220
3015GU19	30 x 15 (1.18) x (.59)	UNC5/16-18	19 (.75)	2 (.08)	43	260	58	236	1334	87	20	37	209
3015AU19					57	481	108	437	2467	161	36	68	387
3015KU19					68	780	175	708	4001	261	59	111	627
3020GU19	30 x 20 (1.18) x (.79)	UNC5/16-18	19 (.75)	2 (.08)	43	204	46	128	723	68	15	25	141
3020AU19					57	377	85	237	1338	126	28	46	261
3020KU19					68	612	138	384	2170	204	46	75	424
3025GU19	30 x 25 (1.18) x (.98)	UNC5/16-18	19 (.75)	2 (.08)	43	180	40	86	486	60	13	19	107
3025AU19					57	333	75	159	899	111	25	35	199
3025KU19					68	540	121	258	1458	180	40	57	322
3028GU19	30 x 28 (1.18) x (1.10)	UNC5/16-18	19 (.75)	2 (.08)	43	171	38	71	401	57	13	17	96
3028AU19					57	316	71	131	742	105	24	31	178
3028KU19					68	513	115	213	1204	171	38	51	288
3030GU19	30 x 30 (1.18) x (1.18)	UNC5/16-18	19 (.75)	2 (.08)	43	166	37	64	362	55	47	16	90
3030AU19					57	307	69	118	669	102	23	30	167
3030KU19					68	498	112	192	1085	165	37	48	271

Part Number	Dia. x Heigth mm (Inch) (D) x (H)	Thread (G)	Length mm (Inch) (L)	Thickness mm (Inch) (S)	Quality NR ShoreA Duro	Compression Max. Static Load N	Compression Max. Static Load lbs	Compression Spring Rate Ks N/mm	Compression Spring Rate Ks lbs/in	Shear Max. Static Load N	Shear Max. Static Load lbs	Shear Spring Rate Ks N/mm	Shear Spring Rate Ks lbs/in
3035GU19	30 x 35 (1.18) x (1.38)	UNC5/16-18	19 (.75)	2 (.08)	43	157	35	51	288	52	12	13	73
3035AU19					57	290	65	94	533	96	22	24	136
3035KU19					68	471	106	153	865	156	35	39	220
3040GU19	30 x 40 (1.18) x (1.57)	UNC5/16-18	19 (.75)	2 (.08)	43	152	34	42	237	51	47	11	62
3040AU19					57	281	63	78	439	94	21	20	115
3040KU19					68	456	103	126	712	153	34	33	186
3219GU19	31.8 x 19.1 (1.25) x (.75)	UNC5/16-18	22 (.87)	2 (.08)	43	250	56	167	944	83	47	31	175
3219AU19					57	463	104	309	1746	154	35	57	324
3219KU19					68	750	169	501	2831	249	56	93	526
3225GU19	31.8 x 25.4 (1.25) x (1)	UNC5/16-18	22 (.87)	2 (.08)	43	210	47	100	565	70	31	22	124
3225AU19					57	389	87	185	1045	130	29	41	230
3225KU19					68	630	142	300	1695	210	47	66	373
3232GU19	31.8 x 25.4 (1.25) x (1)	UNC5/16-18	22 (.87)	2 (.08)	43	188	42	67	379	63	14	16	90
3232AU19					57	348	78	124	700	117	26	30	167
3232KU19					68	564	127	201	1136	189	42	48	271
3516GU19	35 x 15.8 (1.38) x (.62)	UNC5/16-18	22 (.87)	2 (.08)	43	372	84	310	1752	124	28	46	260
3516AU19					57	688	155	574	3241	229	52	85	481
3516KU19					68	1116	251	930	5256	372	84	138	780
3525GU19	35 x 15.8 (1.38) x (.62)	UNC5/16-18	22 (.87)	2 (.08)	43	262	59	125	706	87	20	26	147
3525AU19					57	485	109	231	1307	161	36	48	272
3525KU19					68	786	177	375	2119	261	59	78	441
3825GU19	38 x 25.4 (1.50) x (1)	UNC5/16-18	22 (.87)	2 (.08)	43	322	72	153	865	107	24	31	175
3825AU19					57	596	134	283	1600	198	45	57	324
3825KU19					68	966	217	459	2594	321	72	93	526
3838GU19	38 x 38 (1.50) x (1.50)	UNC5/16-18	22 (.87)	2 (.08)	43	264	59	78	441	88	20	19	107
3838AU19					57	488	110	144	815	163	37	35	199
3838KU19					68	792	178	234	1322	264	59	57	322
3825G10U25	38 x 25.4 (1.50) x (1)	UNC3/8-16	25 (.98)	2 (.08)	43	322	72	153	865	107	24	31	175
3825A10U25					57	596	134	283	1600	198	45	57	324
3825K10U25					68	966	217	459	2594	321	72	93	526
3838G10U25	38 x 25.4 (1.50) x (1)	UNC3/8-16	25 (.98)	2 (.08)	43	264	59	78	441	88	20	19	107
3838A10U25					57	488	110	144	815	163	37	35	199
3838K10U25					68	792	178	234	1322	264	59	57	322

Part Number	Dia. x Heigth mm (Inch) (D) x (H)	Thread (G)	Length mm (Inch) (L)	Thickness mm (Inch) (S)	Quality NR ShoreA Duro	Compression Max. Static Load N	Compression Max. Static Load lbs	Compression Spring Rate Ks N/mm	Compression Spring Rate Ks lbs/in	Shear Max. Static Load N	Shear Max. Static Load lbs	Shear Spring Rate Ks N/mm	Shear Spring Rate Ks lbs/in
4015GU22	40 x 15 (1.57) x (.59)	UNC5/16-18	22 (.87)	2 (.08)	43	589	132	535	3023	196	44	66	373
4015AU22					57	1090	245	990	5593	363	82	122	690
4015KU22					68	1767	397	1605	9070	588	132	198	1119
4020GU22	40 x 20 (1.57) x (.79)	UNC5/16-18	22 (.87)	2 (.08)	43	434	98	271	1531	145	33	45	254
4020AU22					57	803	180	501	2833	268	60	83	470
4020KU22					68	1302	293	813	4594	435	98	135	763
4025GU22	40 x 25 (1.57) x (.98)	UNC5/16-18	22 (.87)	2 (.08)	43	366	82	175	989	122	27	34	192
4025AU22					57	677	152	324	1830	226	51	63	355
4025KU22					68	1098	247	525	2967	366	82	102	576
4030GU22	40 x 30 (1.57) x (1.18)	UNC5/16-18	22 (.87)	2 (.08)	43	330	74	127	718	110	25	28	158
4030AU22					57	611	137	235	1328	204	46	52	293
4030KU22					68	990	223	381	2153	330	74	84	475
4035GU22	40 x 35 (1.57) x (1.38)	UNC5/16-18	22 (.87)	2 (.08)	43	307	69	99	559	102	23	23	130
4035AU22					57	568	128	183	1035	189	42	43	240
4035KU22					68	921	207	297	1678	306	69	69	390
4040AU22	40 x 40 (1.57) x (1.57)	UNC5/16-18	22 (.87)	2 (.08)	43	292	66	81	458	97	22	20	113
4040AU22					57	540	121	150	847	179	40	37	209
4040KU22					68	876	197	243	1373	291	65	60	339
4020G10U25	40 x 20 (1.57) x (.79)	UNC3/8-16	25 (.98)	2 (.08)	43	434	98	271	1531	145	33	45	254
4020A10U25					57	803	180	501	2833	268	60	83	470
4020K10U25					68	1302	293	813	4594	435	98	135	763
4025G10U25	40 x 25 (1.57) x (.98)	UNC3/8-16	25 (.98)	2 (.08)	43	366	82	175	989	122	27	34	192
4025A10U25					57	677	152	324	1830	226	51	63	355
4025K10U25					68	1098	247	525	2967	366	82	102	576
4030G10U25	40 x 30 (1.57) x (1.18)	UNC3/8-16	25 (.98)	2 (.08)	43	330	74	127	718	110	25	28	158
4030A10U25					57	611	137	235	1328	204	46	52	293
4030K10U25					68	990	223	381	2153	330	74	84	475
4035G10U25	40 x 35 (1.57) x (1.38)	UNC3/8-16	25 (.98)	2 (.08)	43	307	69	99	559	102	23	23	130
4035A10U25					57	568	128	183	1035	189	42	43	240
4035K10U25					68	921	207	297	1678	306	69	69	390
4040A10U25	40 x 40 (1.57) x (1.57)	UNC3/8-16	25 (.98)	2 (.08)	43	292	66	81	458	97	22	20	113
4040A10U25					57	540	121	150	847	179	40	37	209
4040K10U25					68	876	197	243	1373	291	65	60	339

Part Number	Dia. x Heigth mm (Inch) (D) x (H)	Thread (G)	Length mm (Inch) (L)	Thickness mm (Inch) (S)	Quality NR ShoreA Duro	Compression Max. Static Load N	Compression Max. Static Load lbs	Compression Spring Rate Ks N/mm	Compression Spring Rate Ks lbs/in	Shear Max. Static Load N	Shear Max. Static Load lbs	Shear Spring Rate Ks N/mm	Shear Spring Rate Ks lbs/in
5015GU25	50 x 15 (1.97) x (.59)	UNC3/8-16	25 (.98)	2 (.08)	43	1452	326	1613	9115	484	109	125	706
5015AU25					57	2686	604	2984	16864	895	201	231	1307
5015KU25					68	4356	979	4839	27346	1452	326	375	2119
5020GU25	50 x 20 (1.97) x (.79)	UNC3/8-16	25 (.98)	2 (.08)	43	905	203	646	3651	302	68	80	452
5020AU25					57	1674	376	1195	6754	559	126	148	836
5020KU25					68	2715	610	1938	10952	906	204	240	1356
5025GU25	50 x 25 (1.97) x (.98)	UNC3/8-16	25 (.98)	2 (.08)	43	703	158	370	2091	234	53	59	333
5025AU25					57	1301	292	685	3868	433	97	109	617
5025KU25					68	2109	474	1110	6273	702	158	177	1000
5030GU25	50 x 30 (1.97) x (1.18)	UNC3/8-16	25 (.98)	2 (.08)	43	603	136	251	1418	201	47	47	266
5030AU25					57	1116	251	464	2624	372	84	87	491
5030KU25					68	1809	407	753	4255	603	136	141	797
5035GU25	50 x 35 (1.97) x (1.38)	UNC3/8-16	25 (.98)	2 (.08)	43	544	122	187	1057	181	31	39	220
5035AU25					57	1006	226	346	1955	335	75	72	408
5035KU25					68	1632	367	561	3170	543	122	117	661
5040GU25	50 x 40 (1.97) x (1.57)	UNC3/8-16	25 (.98)	2 (.08)	43	505	114	149	842	168	38	33	186
5040AU25					57	934	210	276	1558	311	70	61	345
5040KU25					68	1515	341	447	2526	504	113	99	559
5045GU25	50 x 45 (1.97) x (1.77)	UNC3/8-16	25 (.98)	2 (.08)	43	479	108	123	695	160	36	29	164
5045AU25					57	886	199	228	1286	296	67	54	303
5045KU25					68	1437	323	369	2085	480	108	87	492
5050GU25	50 x 50 (1.97) x (1.97)	UNC3/8-16	25 (.98)	2 (.08)	43	459	103	104	588	153	34	25	141
5050AU25					57	849	191	192	1087	283	64	46	261
5050KU25					68	1377	310	312	1763	459	103	75	424
5075GU25	50 x 75 (1.97) x (2.95)	UNC3/8-16	25 (.98)	3 (.12)	43	408	92	59	333	136	31	16	90
5075AU25					57	755	170	109	617	252	57	30	167
5075KU25					68	1224	275	177	1000	408	92	48	271
5015G13U25	50 x 15 (1.97) x (.59)	UNC1/2-13	25 (.98)	3 (.12)	43	307	69	99	559	102	23	23	130
5015A13U25					57	568	128	183	1035	189	42	43	240
5015K13U25					68	921	207	297	1678	306	69	69	390
5020G13U25	50 x 20 (1.97) x (.79)	UNC1/2-13	25 (.98)	3 (.12)	43	292	66	81	458	97	22	20	113
5020A13U25					57	540	121	150	847	179	40	37	209
5020K13U25					68	876	197	243	1373	291	65	60	339

Part Number	Dia. x Heigth mm (Inch) (D) x (H)	Thread (G)	Length mm (Inch) (L)	Thickness mm (Inch) (S)	Quality NR ShoreA Duro	Compression Max. Static Load N	Compression Max. Static Load lbs	Compression Spring Rate Ks N/mm	Compression Spring Rate Ks lbs/in	Shear Max. Static Load N	Shear Max. Static Load lbs	Shear Spring Rate Ks N/mm	Shear Spring Rate Ks lbs/in
5025G13U25	50 x 25 (1.97) x (.98)	UNC1/2-13	25 (.98)	2 (.08)	43	703	158	370	2091	234	53	59	333
5025A13U25					57	1301	292	685	3868	433	97	109	617
5025K13U25					68	2109	474	1110	6273	702	158	177	1000
5030G13U25	50 x 30 (1.97) x (1.18)	UNC1/2-13	25 (.98)	2 (.08)	43	603	136	251	1418	201	47	47	266
5030A13U25					57	1116	251	464	2624	372	84	87	491
5030K13U25					68	1809	407	753	4255	603	136	141	797
5035G13U25	50 x 35 (1.97) x (1.38)	UNC1/2-13	25 (.98)	2 (.08)	43	544	122	187	1057	181	31	39	220
5035A13U25					57	1006	226	346	1955	335	75	72	408
5035K13U25					68	1632	367	561	3170	543	122	117	661
5040G13U25	50 x 40 (1.97) x (1.57)	UNC1/2-13	25 (.98)	2 (.08)	43	505	114	149	842	168	38	33	186
5040A13U25					57	934	210	276	1558	311	70	61	345
5040K13U25					68	1515	341	447	2526	504	113	99	559
5045G13U25	50 x 45 (1.97) x (1.77)	UNC1/2-13	25 (.98)	2 (.08)	43	479	108	123	695	160	36	29	164
5045A13U25					57	886	199	228	1286	296	67	54	303
5045K13U25					68	1437	323	369	2085	480	108	87	492
5050G13U25	50 x 50 (1.97) x (1.97)	UNC1/2-13	25 (.98)	2 (.08)	43	459	103	104	588	153	34	25	141
5050A13U25					57	849	191	192	1087	283	64	46	261
5050K13U25					68	1377	310	312	1763	459	103	75	424
5075G13U25	50 x 75 (1.97) x (2.95)	UNC1/2-13	25 (.98)	3 (.12)	43	408	92	59	333	136	31	16	90
5075A13U25					57	755	170	109	617	252	57	30	167
5075K13U25					68	1224	275	177	1000	408	92	48	271
7525GU38	75 x 25 (2.95) x (.98)	UNC1/2-13	38 (1.50)	2 (.08)	43	2240	504	1179	6663	747	168	133	752
7525AU38					57	4144	932	2181	12326	1382	311	246	1390
7525KU38					68	6720	1511	3537	19988	2241	504	399	2255
7530GU38	75 x 30 (2.95) x (1.18)	UNC1/2-13	38 (1.50)	3 (.12)	43	1809	407	754	4261	603	136	105	593
7530AU38					57	3347	752	1395	7883	1116	251	194	1098
7530KU38					68	5427	1220	2262	12783	1809	407	315	1780
7535GU38	75 x 35 (2.95) x (1.38)	UNC1/2-13	38 (1.50)	3 (.12)	43	1562	351	539	3046	521	117	87	492
7535AU38					57	2890	650	997	5635	964	217	161	910
7535KU38					68	4686	1053	1617	9138	1563	351	261	1475
7540GU38	75 x 40 (2.95) x (1.57)	UNC1/2-13	38 (1.50)	3 (.12)	43	1404	316	413	2334	468	105	74	418
7540AU38					57	2597	584	764	4318	866	195	137	774
7540KU38					68	4212	947	1239	7002	1404	316	222	1255

Part Number	Dia. x Heigth mm (Inch) (D) x (H)	Thread (G)	Length mm (Inch) (L)	Thickness mm (Inch) (S)	Quality NR ShoreA Duro	Compression Max. Static Load N	Compression Max. Static Load lbs	Compression Spring Rate Ks N/mm	Compression Spring Rate Ks lbs/in	Shear Max. Static Load N	Shear Max. Static Load lbs	Shear Spring Rate Ks N/mm	Shear Spring Rate Ks lbs/in
7545GU38	75 x 45 (2.95) x (1.77)	UNC1/2-13	38 (1.50)	3 (.12)	43	1295	291	332	1876	432	97	65	367
7545AU38					57	2396	539	614	3471	799	180	120	680
7545KU38					68	3885	873	996	5629	1296	291	195	1102
7550GU38	75 x 50 (2.95) x (1.97)	UNC1/2-13	38 (1.50)	3 (.12)	43	1216	273	276	1560	405	47	57	322
7550AU38					57	2250	506	511	2886	749	168	105	596
7550KU38					68	3648	820	828	4679	1215	273	171	966
7555GU38	75 x 55 (2.95) x (2.17)	UNC1/2-13	38 (1.50)	3 (.12)	43	1157	260	236	1334	386	31	51	288
7555AU38					57	2140	481	437	2467	714	161	94	533
7555KU38					68	3471	780	708	4001	1158	260	153	865
7560GU38	75 x 60 (2.95) x (2.36)	UNC1/2-13	38 (1.50)	3 (.12)	43	1110	250	206	1164	370	83	47	266
7560AU38					57	2054	462	381	2154	685	154	87	491
7560KU38					68	3330	749	618	3492	1110	250	141	797
7570GU38	75 x 70 (2.95) x (2.76)	UNC1/2-13	38 (1.50)	3 (.12)	43	1043	234	163	921	348	78	39	220
7570AU38					57	1930	434	302	1704	644	145	72	408
7570KU38					68	3129	703	489	2763	1044	235	117	661
7575GU38	75 x 75 (2.95) x (2.95)	UNC1/2-13	38 (1.50)	3 (.12)	43	1018	229	148	836	339	76	37	209
7575AU38					57	1883	423	274	1547	627	141	68	387
7575KU38					68	3054	687	444	2509	1017	229	111	627
75100GU38	75 x 100 (2.95) x (3.94)	UNC1/2-13	25 (.98)	3 (.12)	43	938	211	100	565	313	70	27	153
75100AU38					57	1735	390	185	1045	579	130	50	282
75100KU38					68	2814	633	300	1695	939	211	81	458
8050GU38	80 x 50 (3.15) x (1.97)	UNC1/2-13	25 (.98)	3 (.12)	43	1430	321	325	1837	477	107	65	367
8050AU38					57	2646	595	601	3398	882	198	120	680
8050KU38					68	4290	964	975	5510	1431	322	195	1102
8057GU38	80 x 57 (3.15) x (2.24)	UNC1/2-13	38 (1.50)	2 (.08)	43	1331	299	261	1475	444	100	56	316
8057AU38					57	2462	554	483	2729	821	185	104	585
8057KU38					68	3993	898	783	4425	1332	299	168	949
8075GU38	80 x 75 (3.15) x (2.95)	UNC1/2-13	38 (1.50)	3 (.12)	43	1183	266	171	966	394	89	42	237
8075AU38					57	2189	492	316	1788	729	164	78	439
8075KU38					68	3549	798	513	2899	1182	266	126	712

Part Number	Dia. x Heigth mm (Inch) (D) x (H)	Thread (G)	Length mm (Inch) (L)	Thickness mm (Inch) (S)	Quality NR ShoreA Duro	Compression Max. Static Load N	Compression Max. Static Load lbs	Compression Spring Rate Ks N/mm	Compression Spring Rate Ks lbs/in	Shear Max. Static Load N	Shear Max. Static Load lbs	Shear Spring Rate Ks N/mm	Shear Spring Rate Ks lbs/in
1035GU	100 x 35 (3.94) x (1.38)	UNC5/8-11	46 (1.81)	4 (.16)	43	3743	841	1386	7833	1248	281	166	938
1035AU					57	6925	1557	2564	14490	2309	519	307	1735
1035KU					68	11229	2524	4158	23498	3744	842	498	2814
1040GU	100 x 40 (3.94) x (1.57)	UNC5/8-11	46 (1.81)	4 (.16)	43	3217	723	1005	5679	1072	241	140	791
1040AU					57	5951	1338	1859	10507	1983	446	259	1464
1040KU					68	9651	2170	3015	17038	3216	723	420	2374
1045GU	100 x 45 (3.94) x (1.77)	UNC5/8-11	46 (1.81)	4 (.16)	43	2868	645	775	4380	956	215	121	684
1045AU					57	5306	1193	1434	8102	1769	398	224	1265
1045KU					68	8604	1934	2325	13139	2868	645	363	2051
1050GU	100 x 50 (3.94) x (1.97)	UNC5/8-11	46 (1.81)	4 (.16)	43	2622	589	624	3526	874	196	107	605
1050AU					57	4851	1090	1154	6524	1617	363	198	1119
1050KU					68	7866	1768	1872	10579	2622	589	321	1814
1055GU	100 x 55 (3.94) x (2.17)	UNC5/8-11	46 (1.81)	4 (.16)	43	2441	549	519	2933	814	183	95	537
1055AU					57	4516	1015	960	5426	1506	339	176	993
1055KU					68	7323	1646	1557	8799	2442	549	285	1611
1060GU	100 x 60 (3.94) x (2.36)	UNC5/8-11	46 (1.81)	4 (.16)	43	2302	518	443	2503	767	172	86	486
1060AU					57	4259	957	820	4631	1419	319	159	899
1060KU					68	6906	1553	1329	7510	2301	517	258	1458
1065GU	100 x 65 (3.94) x (2.56)	UNC5/8-11	46 (1.81)	4 (.16)	43	2194	493	385	2176	731	164	79	446
1065AU					57	4059	912	712	4025	1352	304	146	826
1065KU					68	6582	1480	1155	6527	2193	493	237	1339
1070GU	100 x 70 (3.94) x (2.76)	UNC5/8-11	46 (1.81)	4 (.16)	43	2106	473	340	1921	702	158	72	407
1070AU					57	3896	876	629	3555	1299	292	133	753
1070KU					68	6318	1420	1020	5764	2106	473	216	1221
1075GU	100 x 75 (3.94) x (2.95)	UNC5/8-11	46 (1.81)	4 (.16)	43	2034	457	304	1718	678	152	67	379
1075AU					57	3763	846	562	3178	1254	282	124	700
1075KU					68	6102	1372	912	5154	2034	457	201	1136
1080GU	100 x 80 (3.94) x (3.15)	UNC5/8-11	46 (1.81)	4 (.16)	43	1974	444	274	1548	658	148	62	350
1080AU					57	3652	821	507	2865	1217	274	115	648
1080KU					68	5922	1331	822	4645	1974	444	186	1051
10100GU	100 x 100 (3.94) x (3.94)	UNC5/8-11	46 (1.81)	4 (.16)	43	1810	407	197	1113	603	136	49	277
10100AU					57	3349	753	364	2060	1116	251	91	512
10100KU					68	5430	1221	591	3340	1809	407	147	831

Part Number	Dia. x Heigth mm (Inch) (D) x (H)	Thread (G)	Length mm (Inch) (L)	Thickness mm (Inch) (S)	Quality NR ShoreA Duro	Compression Max. Static Load N	Compression Max. Static Load lbs	Compression Spring Rate Ks N/mm	Compression Spring Rate Ks lbs/in	Shear Max. Static Load N	Shear Max. Static Load lbs	Shear Spring Rate Ks N/mm	Shear Spring Rate Ks lbs/in
10140GU	100 x 140 (3.94) x (5.51)	UNC5/8-11	46 (1.81)	4 (.16)	43	1810	407	197	1113	603	136	49	277
10140AU					57	3349	753	364	2060	1116	251	91	512
10140KU					68	5430	1221	591	3340	1809	407	147	831
1250GU	125 x 50 (4.92) x (1.97)	UNC5/8-11	46 (1.81)	4 (.16)	43	1648	370	125	706	549	123	34	192
1250AU					57	3049	685	231	1307	1016	228	63	355
1250KU					68	4944	1111	375	2119	1647	370	102	576
1260GU	125 x 60 (4.92) x (2.36)	UNC5/8-11	46 (1.81)	4 (.16)	43	4479	1007	1120	6329	1493	161	238	1345
1260AU					57	8286	1863	2072	11709	2762	621	440	2488
1260KU					68	13437	3021	3360	18988	4479	1007	714	4035
1275GU	125 x 75 (4.92) x (2.95)	UNC5/8-11	46 (1.81)	4 (.16)	43	4236	952	847	4787	1412	317	140	791
1275AU					57	7837	1762	1567	8855	2612	587	259	1464
1275KU					68	12708	2857	2541	14360	4236	952	420	2374
1550GU	150 x 50 (5.91) x (1.97)	UNC5/8-11	46 (1.81)	5 (.20)	43	8523	1916	2131	12043	2841	639	252	1424
1550AU					57	15768	3545	3942	22279	5256	1182	466	2635
1550KU					68	25569	5748	6393	36128	8523	1916	756	4272
1560GU	150 x 60 (5.91) x (2.36)	UNC5/8-11	46 (1.81)	5 (.20)	43	6998	1573	1400	7912	2333	524	202	1142
1560AU					57	12946	2910	2590	14637	4316	970	374	2112
1560KU					68	20994	4720	4200	23735	6999	1573	606	3425
1575GU	150 x 75 (5.91) x (2.95)	UNC5/8-11	46 (1.81)	5 (.20)	43	5779	1299	889	5024	1926	433	155	876
1575AU					57	10691	2403	1645	9294	3563	801	287	1620
1575KU					68	17337	3898	2667	15072	5778	1299	465	2628
15100GU	150 x 100 (5.91) x (3.94)	UNC5/8-11	46 (1.81)	5 (.20)	43	4812	1082	535	3023	1604	361	112	633
15100AU					57	8902	2001	990	5593	2967	667	207	1171
15100KU					68	14436	3245	1605	9070	4812	1082	336	1899
2050GU	200 x 50 (7.87) x (1.97)	UNC3/4-10	50 (1.97)	5 (.20)	43	20511	4611	5128	28979	6837	1537	448	2532
2050AU					57	37945	8530	9487	53612	12648	2843	829	4684
2050KU					68	61533	13833	15384	86938	20511	4611	1344	7595
2075GU	200 x 75 (7.87) x (2.95)	UNC3/4-10	50 (1.97)	5 (.20)	43	12702	2856	1954	11042	4234	952	276	1560
2075AU					57	23499	5283	3615	20429	7833	1761	511	2886
2075KU					68	38106	8567	5862	33127	12702	2856	828	4679
20100GU	200 x 100 (7.87) x (3.94)	UNC3/4-10	50 (1.97)	5 (.20)	43	10029	2255	1114	6295	3343	752	199	1125
20100AU					57	18554	4171	2061	11647	6185	1390	368	2080
20100KU					68	30087	6764	3342	18886	10029	2255	597	3374